PRELIMINARY ISSUE

Work Order ID 60340

July 6, 2010 7:49:26 AM

Item ID: D4103-1
Revision ID: PRELIM
Item Name: Step / Handle

Accept

Setup Start
Stop

Start Date: 06/07/2010 **Start Qty:** 2.00
Required Date: 28/07/2010 **Req'd Qty:** 2.00

Cust Item ID:
Customer:

PRELIMINARY ISSUE

Reference: 10.07.06

Run Start
Stop

Approvals: **Process Plan:** _____ **Date:** _____ **Tooling:** _____ **Date:** _____
QC: _____ **Date:** _____ **SPC (Y/N):** _____ **Date:** _____

Draw Nbr	Revision Nbr
D4103	PA2

Sequence ID/ Work Center ID	Operation Description	Set Up/ Run Hours	Tool ID	Tool #	Plan Code	Accept Qty	Reject Qty	Reject Number	Insp. Stamp
100 Bandsaw Jeaspa Bandsaw	Cut blanks as per folio **Memo** 6.200" long	0.00 0.00				2	0		
110 HAAS 1 HAAS CNC vertical machine #1	**Memo** Mill as per dwg and Folio FA937 DEBURR	0.00 0.00				2	0		
120 QC Quality Control	QC2- Inspect parts off machine FAI/FAIB **Memo**	0.00 0.00				2	0		

Work Order ID 60340

July 6, 2010 7:49:26 AM

Item ID: D4103-1
Revision ID: PRELIM
Item Name: Step / Handle

Accept

Setup Start
Stop

Start Date: 06/07/2010 **Start Qty:** 2.00
Required Date: 28/07/2010 **Req'd Qty:** 2.00
Reference:

Cust Item ID:
Customer:

Run Start
Stop

Approvals: **Process Plan:** _____ **Date:** _____ **Tooling:** _____ **Date:** _____
QC: _____ **Date:** _____ **SPC (Y/N):** _____ **Date:** _____

Sequence ID/ Work Center ID	Operation Description	Set Up/ Run Hours	Tool ID	Tool #	Plan Code	Accept Qty	Reject Qty	Reject Number	Insp. Stamp
130	QC8- Inspect parts - second check	0.00 – Inspected to PA-2 Dry only							
QC Quality Control	Memo	0.00 10/07/21							
140	Chemical Conversion Coat per QSI005 4.1	0.00				2	BR	10-7-21	
HandFinish Hand Finishing	Memo	0.00							
150	QC3- Inspect Part Finish	0.00				2	✓		
QC Quality Control	Memo	0.00 10/07/21							

Work Order ID 60340

July 6, 2010 7:49:26 AM

Item ID: D4103-1
Revision ID: PRELIM
Item Name: Step / Handle

Accept

Setup **Start**
Stop

Start Date: 06/07/2010 **Start Qty:** 2.00
Required Date: 28/07/2010 **Req'd Qty:** 2.00
Reference:

Cust Item ID:
Customer:

Run **Start**
Stop

Approvals: **Process Plan:** _____ **Date:** _____ **Tooling:** _____ **Date:** _____
QC: _____ **Date:** _____ **SPC (Y/N):** _____ **Date:** _____

Sequence ID/ Work Center ID	Operation Description	Set Up/ Run Hours	Tool ID	Tool #	Plan Code	Accept Qty	Reject Qty	Reject Number	Insp. Stamp
160	Identify as per dwg & Stock Location	0.00							
Packaging	Memo	0.00							
Packaging									
170	QC21- Final Inspection - Work Order Release	0.00							
QC	Memo	0.00							
Quality Control									

Pred 10.07-21
Shelf

A. PA2 ~~test~~. 10.07.22
Optionally Rev A. 10.07.30

MF 10-7-21

POSITIVE RECALL
EFFECTIVE 10/7/10 AUTH
RELEASED _____ DATE

Picklist Print

July 6, 2010 7:49:25 AM

Work Order ID: 60340

Parent Item: D4103-1

Parent Item Name: Step / Handle

Start Date: 06/07/2010 **Required Date:** 28/07/2010

Start Qty: 2.00 **Required Qty:** 2.00

Comments: IPP REV: A NEW ISSUE 10-07-01 JLM VERIFIED BY:DD

Component Item ID/ Item Name	Replacement Item ID	Mfg/ Purch	Bin Item	Primary Location	Last Location	Route Seq ID	Unit of Measure	Qty on Hand	Qty per Kit	Total Qty	Qty Issued	Date Issued	Status
M6061T6B2.000X03.500		Purchased	No			100	f	18.7375	0.52	1.094737			

6061-T6 Bar 2.00 x 3.50

Location	Loc Qty	Loc Code
MAT09	18.7375	
112764	18.7375	

1.0947 DF 10/07/15

DART AEROSPACE LTD	Work Order:	60340
Description: Step/Handle	Part Number:	D4103-1
Inspection Dwg: D4103 Rev: PA2		Page 1 of 1

FIRST ARTICLE INSPECTION CHECKLIST

[X] First Article [ ] Prototype

Drawing Dimension	Tolerance	Actual Dimension	Accept	Reject	Method of Inspection	Comments
2.93	±.030	2.934	✓		vern	
.37	"	.368	✓		"	
.83	"	.837	✓		"	
1.66	"	1.650	✓		"	
.75	+.000 -.045	.748	✓		"	
.33	±.030	.335	✓		"	
.45	"	.45	✓		"	
1.78	"	1.783	✓		vern	
.26	"	.25	✓		"	
Ø.560	±.010	.556	✓		"	
.30	±.030	.289	✓		"	
1.07	"	1.07	✓		"	
3.85	"	3.85	✓		"	
.25	"	.25	✓		"	
.28	"	~~6.00~~ .28	✓		vern	
6.00	"	6.00	✓		"	
.31	"	.31	✓		"	
1.74	"	1.74	✓		"	
2.500	"	2.500	✓		"	
1.66	"	1.641	✓		"	
Ø.438	+.006 -.001	.438			vern	
.56	±.030	.56	✓		"	
Ø.266	+.006 -.001	.267	✓		"	

Measured by:	SF	Audited by:	S	Prototype Approval:	N/A
Date:	10/07/21	Date:	10/07/21	Date:	N/A

to PA2 Dwg only

Rev	Date	Change	Revised by	Approved
A		New Issue	KJ/JLM	

CTD.

DART AEROSPACE LTD	Work Order:	60340
Description: Step/Handle	Part Number:	D4103-1
Inspection Dwg: D4103 Rev: PA2		Page 1 of 1

FIRST ARTICLE INSPECTION CHECKLIST

[X] First Article [ ] Prototype

Drawing Dimension	Tolerance	Actual Dimension	Accept	Reject	Method of Inspection	Comments
1.25	±.030	1.25	✓		Vern	
.98	"	.98	✓		"	
.25	"	.243	✓		"	
2.25	"	2.25	✓		"	
1.00	"	1.00	✓		"	
2.25	"	2.25	✓		"	
.20	"	.200	✓		"	
.98	"	.986	✓		"	
.32	"	.32	✓		"	
1.25	"	1.250	✓		"	
.18	"	.18	✓		"	

Measured by:	JE
Date:	10/07/21

Audited by:	S
Date:	10/07/21

to add Dwg on by

Prototype Approval:	N/A
Date:	N/A

Rev	Date	Change	Revised by	Approved
A		New Issue	KJ/JLM	

w/o 60340

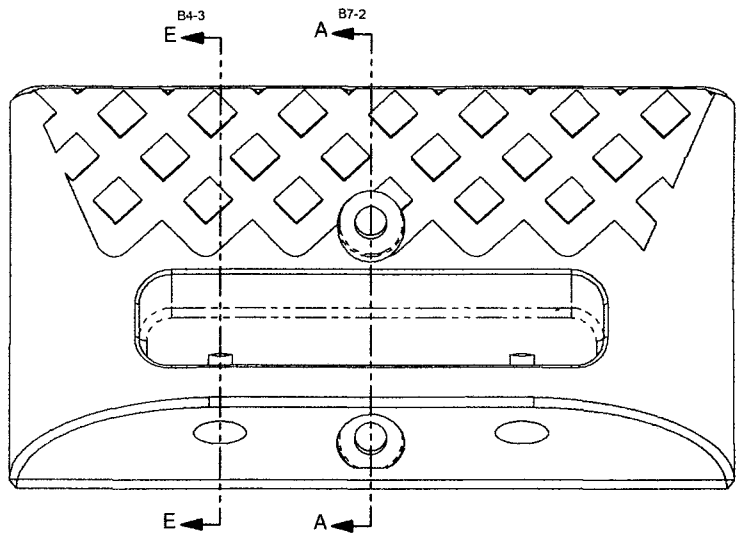

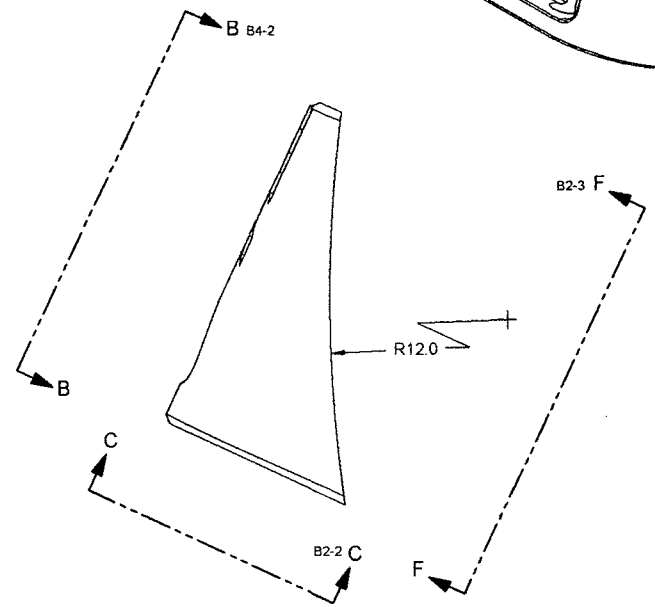

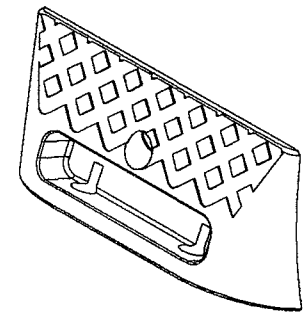

D4103-1 STEP/HANDLE

PRELIMINARY ISSUE

RF 10.05.17

NOTES:
1) MATERIAL: 6061-T6/T651/T6510/T6511/T62 ALUMINUM BAR
PER QQ-A-225/8 OR AMS-QQ-A-225/8 (OR AMS 4117/4128/4115/4116)
OR QQ-A-200/8 OR AMS-QQ-A-200/8 (OR AMS 4160)
OR ASTM B211 OR ASTM B221
PA2 2) FINISH: CHEMICAL CONVERSION COAT PER DART QSI 005 4.1
3) TOLERANCES: PER DART QSI 018 UNLESS OTHERWISE NOTED
4) UNITS: INCHES UNLESS OTHERWISE NOTED
5) BREAK SHARP EDGES: 0.005 TO 0.010 MAX
6) IDENTIFICATION: IDENTIFY WITH DART P/N "D4103-1" USING FINE POINT PERMANENT INK MARKER
7) WEIGHT: 0.81 lbs
8) MACHINE 0.28 x 0.31 GRIP 0.030 DEEP AT 45° PATTERN 0.25 APART

REV.	DESCRIPTION	BY	DATE
PA2	REMOVE PRIME PAINT (ZN A8-2); ADD SECTION VIEW (ZN B5-3, B2-3)	RF	10.05.17
PA1	NEW ISSUE	RF	10.05.06

DESIGN	RF	DART AEROSPACE LTD HAWKESBURY, ONTARIO, CANADA	
DRAWN	RF		
CHECKED		DRAWING NO. D4103	REV. PA2
MFG. APPR.			SHEET 1 OF 3
APPROVED		TITLE STEP/HANDLE	SCALE NTS
DE APPR.			
DATE	10.05.17		

w/o 60340

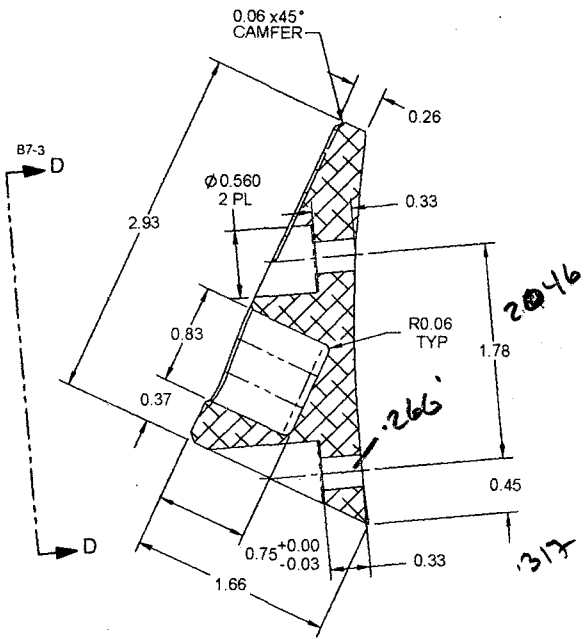

SECTION A-A D6-1

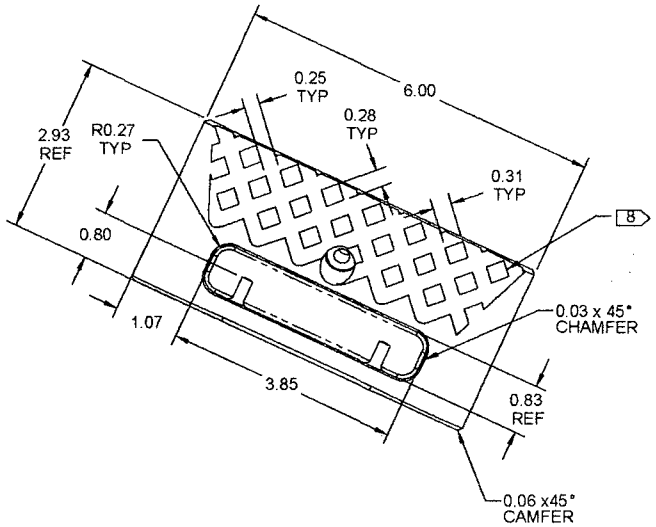

VIEW B-B D3-1
SCALE 0.5X

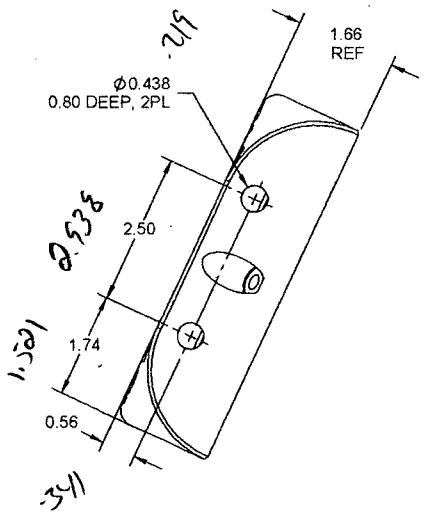

VIEW C-C B2-1
SCALE 0.5X

PRELIMINARY ISSUE

RF 10.05.17

DESIGN	RF	**DART AEROSPACE LTD** HAWKESBURY, ONTARIO, CANADA
DRAWN	RF	
CHECKED		DRAWING NO. D4103 — REV. PA2 — SHEET 2 OF 3
MFG. APPR.		
APPROVED		TITLE STEP/HANDLE — SCALE NTS
DE APPR.		
DATE	10.05.17	

w/o 60340

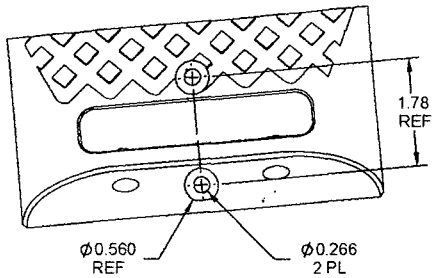

VIEW D-D C8-2
SCALE 0.5X

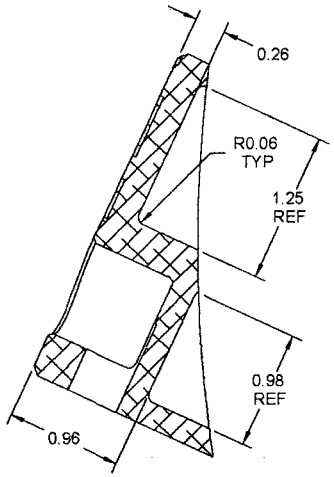

VIEW E-E D7-1

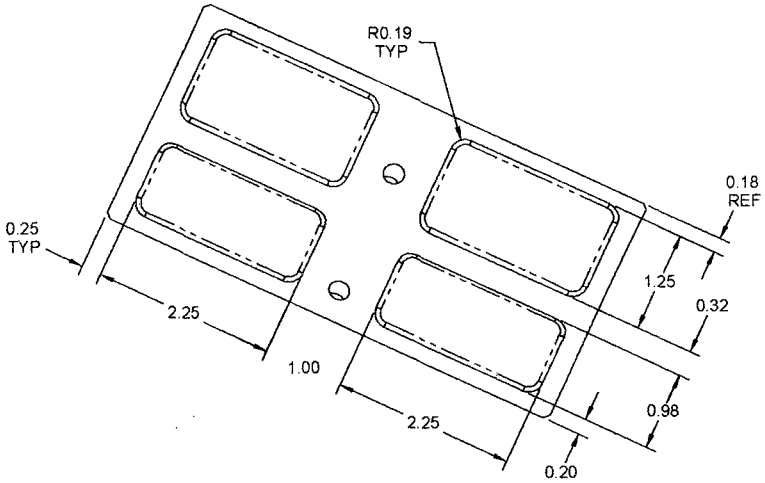

VIEW F-F C1-1

PRELIMINARY ISSUE

RF 10.05.17

DESIGN	RF	**DART AEROSPACE LTD** HAWKESBURY, ONTARIO, CANADA
DRAWN	RF	
CHECKED		DRAWING NO. D4103 — REV. PA2 — SHEET 3 OF 3
MFG. APPR.		
APPROVED		TITLE STEP/HANDLE — SCALE NTS
DE APPR.		
DATE	10.05.17	

Receiving Report

Date: 9/5/24

Batch No: M112764

Supplier: MAGNA

Dart P/O: 10386

Packing Slip: Yes ✓ No ___
Invoice: Yes ___ No ✓
Receipt: Cash ___ Cr ✓

Release Note Attached: Yes ✓ No ___ N/A ___
Waybill Attached: Yes ___ No ✓
Shipment Complete: Yes ✓ No ___ N/A ___
QC6 Inspection ✓ N/A ___
Work Order 02/02/09 N/A ✓

Discrepancies

Part Number	Description	Quantity Ordered	Quantity Received	Quantity Returned	Quantity Short	Comments

Initials of receiver (if shipment OK) Level 12 ___

Production/Admin:
Date 9/5/24
Received/Costing
Initial

Location ___

H:\FORMS\Purchasing\approved purch\RECREPORT Rev D

Dart Aerospace Ltd.
1270 Aberdeen Street
Hawkesbury, ON K6A 1K7
Tel: 613 632 9577
Fax: 613 632 1053

PURCHASE ORDER

Purchase Order ID PO10386

Purchase Order Date 9/10/09
PO Print Date 9/10/09

Order From :

MAGNA STAINLESS
5775 RUE KIERAN
ST LAURENT. QC H4S 0A3
CA

VC-MAG002

FAXED 09/09/10

Contact Name
Vendor Phone 800 363 6646
Vendor Fax 514 339 1105
Vendor Account Nbr

Buyer Chantal Lavoie
Requisition Nbr
Tax Resale Nbr 10127-2607
Terms Net 30
Currency CAD
FOB

Ship To : DART AEROSPACE LTD 1270 ABERDEEN
HAWKESBURY. ON K6A 1K7
CANADA

Line Nbr	Reference / Revision ID / Vendor Part Number	Description/ Mfg ID	Req Date/ Taxable	Req Qty/ Unit of Measure	Ship Method	Unit Price	Extended Price
1	M6061T6S.250	6061T6 SHEET .250	9/10/09 Yes	✓ 32.00 sf	Yours ppd 09/9/14	$13.2800	$424.96
		Special Inst:	MAT: 6061-T6/T62 ALUMINUM SHEET SPEC: QC-A-250/11 OR AMS-QC-A-250/11 OR AMS 4025 OR AMS 4027 OR ASTM B209				
2	M6061T6R0.625	6061-T6 Round Bar .625"	9/10/09 Yes	✓ 60.00 f	Yours ppd 09/9/14	$0.8250	$49.50
		Special Inst:	MAT: 6061-T6/T651/T6510/T6511/T62 ALUMINUM ROUND BAR SPEC: QQ-A-225/8 OR AMS-QQ-A-225/8 (OR AMS 4117/4128/4115/4116) OR QQ-A-200/8 OR AMS-QQ-A-200/8 (OR AMS 4160) OR ASTM B211 OR ASTM B221				
3	M6061T6R0.750	6061-T6 Round Bar .750"	9/10/09 Yes	✓ 60.00 f	Yours ppd 09/9/14	$1.2000	$72.00
		Special Inst:	SAME AS ABOVE				

MATERIAL CERTIFICATION REQ'D UPON DELIVERY

No substitution or deviation without consent.
Certificate of Conformity or Material Certification required when applicable

Change Nbr: 3 **Change Date:** 9/10/09

DART aerospace
Dart Aerospace Ltd.
1270 Aberdeen Street
Hawkesbury, ON K6A 1K7
Tel: 613 632 9577
Fax: 613 632 1053

PURCHASE ORDER

Purchase Order ID PO10386

Purchase Order Date 9/10/09
PO Print Date 9/10/09

Order From : VC-MAG002

MAGNA STAINLESS
5775 RUE KIERAN
ST LAURENT, QC H4S 0A3
CA

Contact Name		**Buyer**	Chantal Lavoie
Vendor Phone	800 363 6646	**Requisition Nbr**	
Vendor Fax	514 339 1105	**Tax Resale Nbr**	10127-2607
Vendor Account Nbr		**Terms**	Net 30
		Currency	CAD
		FOB	

4	M6061T6R1.125	6061 ROUND BAR 1.125	9/10/09 Yes	Neu 20" 12.00 f	Yours ppd /c 9/9/17	$4.1600	$49.92
		Special Inst:	SAME AS ABOVE				
5	M6061T6B0.125X2.500	6061T6 BAR .125 X 2.50	9/18/09 Yes	✓ 12.00 f	Yours ppd /c 9/8/09	$7.6600	$91.92
		Special Inst:	MAT: 6061-T6/T651/T6510/T6511/T62 ALUMINUM BAR SPEC: QC-A-225/8 OR AMS-QC-A-225/8 (OR AMS 4117/4128/4115/4116) OR QC-A-200/8 OR AMS-QQ-A-200/8 (OR AMS 4160) OR ASTM B211 OR ASTM B221				
6	M6061T6B0.500X01.000	6061-T6 Bar .500 x 1.00	9/18/09 Yes	24.00 f	Yours ppd	$18.3300	$439.92
		Special Inst:	SAME AS ABOVE		/c 9/8/09		
7	M6061T6B2.000X03.500	6061-T6 Bar 2.00 x 3.50	9/18/09 Yes	✓ 24.00 f	Yours ppd	$25.8300	$619.92
		Special Inst:	SAME AS ABOVE				
8	M304B0.500X2.500	304 BAR .500 x 2.50	9/10/09 Yes	Neu 12.00 60.00 f	/c 9/8/17 Yours ppd 9844 /c 9/8/09	$15.0000	$900.00
		Special Inst:	MAT: AISI 304/316 STAINLESS STEEL BAR (NOTE: AISI 303 NOT APPLICABLE)				

MATERIAL CERTIFICATION REQ'D UPON DELIVERY

No substitution or deviation without consent.
Certificate of Conformity or Material Certification required when applicable

Change Nbr: 3 **Change Date:** 9/10/09

Dart Aerospace Ltd.
1270 Aberdeen Street
Hawkesbury, ON K6A 1K7
Tel: 613 632 9577
Fax: 613 632 1053

PURCHASE ORDER

Purchase Order ID PO10386

Purchase Order Date 9/10/09
PO Print Date 9/10/09

Order From : VC-MAG002

MAGNA STAINLESS
5775 RUE KIERAN
ST LAURENT, QC H4S 0A3
CA

Contact Name
Vendor Phone 800 363 6646
Vendor Fax 514 339 1105
Vendor Account Nbr

Buyer Chantal Lavoie
Requisition Nbr
Tax Resale Nbr 10127-2607
Terms Net 30
Currency CAD
FOB

9	M304B0.750X2.500	304 BAR .750 X 2.50	9/10/09 Yes	48.00 f	Yours ppd	$27.9200	$1,340.16

Rec'd 36.30 lbs 9/9/09

Special Inst: SAME AS ABOVE

10	M304S11GA	304/316 0.125 Sheet	9/10/09 Yes	128.00 sf	Yours ppd	$10.4700	$1,340.16

Special Inst: MAT: AISI 304/316 SS SHEET
ANNEALED 28 FINISH
SPEC: MIL-S-5059 OR AMS 5513(304) OR
AMS 5524 (316) OR ASTM A240 OR
ASME SA240

PO Total: $5,328.46

MATERIAL CERTIFICATION
REQ'D UPON DELIVERY

No substitution or deviation without consent.
Certificate of Conformity or Material Certification required when applicable

Change Nbr: 3

Change Date: 9/10/09

MAGNA

Magna Stainless
5775 Kieran St, Saint-Laurent QC H4S 0A3
Phone: (514) 339-1211 Watts: 1-800-363-6646 Fax: (514) 339-1105

INVOICE

 I017090

RECEIVED
OCT 05 2009

SOLD TO:

DART AEROSPACE LTD
1270 ABERDEEN STREET
HAWKESBURY , ON
K6A 1K7

SHIP TO:

DART AEROSPACE LTD
1270 ABERDEEN STREET
HAWKESBURY , ON
K6A 1K7
MTR:Y

INVOICE DATE:	09/24/09
ORDER DATE:	09/21/09
SHIP DATE:	09/24/09
ORDER NUMBER:	W018706
PURCHASE ORDER:	10386

Currency	Sales Person	Ship Via	F.O.B.	Terms
CANADIAN DOLLARS	ERYCK BLAIS	NIR:R-557065-1	PREPAID	NET 30 DAYS

Ln	Back Ordered	Ordered	Unit	Description	Shipped	Price Per	Value
				STAINLESS FLATS			
		4	PC	SFL 304 HR 1/2" x 2-1/2" x R/L L031497 12'11" 4 PC/222 LB	4 UN	180.00	720.00

09/25/09 13:26:34

Merchandise:	720.00
Surcharges:	
No Tax Costs:	
GST	36.00
Total Due:	756.00

Title to the goods sent out on this invoice remains with Magna Stainless Div of CSM ULC until such time as this invoice has been paid in full. Unless otherwise noted terms are 30 days. Interest accrues on all overdue accounts at the rate of 1.5% per month compounded monthly.

Q.S.T. # 1213236471
G.S.T. # 881565899 RT0001

MAGNA

Magna Stainless
5775 Kieran St, Saint-Laurent QC H4S 0A3
Phone: (514) 339-1211 Watts: 1-800-363-6646 Fax: (514) 339-1105

INVOICE

RECEIVED
OCT 05 2009

 I017098

SHIP TO:
DART AEROSPACE LTD
1270 ABERDEEN STREET
HAWKESBURY , ON
K6A 1K7
MTR:Y

SOLD TO:
DART AEROSPACE LTD
1270 ABERDEEN STREET
HAWKESBURY , ON
K6A 1K7

INVOICE DATE:	09/24/09
ORDER DATE:	09/14/09
SHIP DATE:	09/24/09
ORDER NUMBER:	W018319
PURCHASE ORDER:	PO10386

Currency	Sales Person	Ship Via	F.O.B.	Terms
CANADIAN DOLLARS	ERYCK BLAIS	NIR:R-557065-1	PREPAID	NET 30 DAYS

Ln	Back Ordered	Ordered	Unit	Description	Shipped	Price Per	Value
				ALUMINUM - LB			
		1	PC	6061-T6 1/8" X 2 1/2" X 144"	1 UN	92.00	92.00
				L031466 1 PC/5 LB			
		2	PC	6061-T6 1/2" X 10" X 144"	2 UN	220.00	440.00
				L031467 2 PC/146 LB			
		2	PC	6061-T6 2" X 3 1/2" X 144"	2 UN	310.00	620.00
				L031468 2 PC/202 LB			

09/25/09 13:26:36

Merchandise:	1,152.00
Surcharges:	
No Tax Costs:	
GST	57.60
Total Due:	1,209.60

Title to the goods sent out on this invoice remains with Magna Stainless Div of CSM ULC until such time as this invoice has been paid in full. Unless otherwise noted terms are 30 days. Interest accrues on all overdue accounts at the rate of 1.5% per month compounded monthly.

Q.S.T. # 1213236471
G.S.T. # 881565899 RT0001

Purchase Order Receipt Listing

September 24, 2009 10:09:29 AM

All amounts are calculated in domestic currency.

All Vendors PO ID PO10386 Receipt Dates from 9/24/2009 to 9/24/2009 All Line Item Types
All Item ID/GL/WOs All Rec. Employees All Currencies
Grouped by Receiver Date

Purchase Order ID	Reference/ Description/ Certification Std	Vendor ID/ Name/ Currency Type	Line Nbr/ Insp Req	Project ID	PO U/M Stock U/M	Req Date	Req Qty	Recv Qty (PO U/M)/ Recv Emp/ Recv Value	Inspected Qty/ Rejected Qty (PO U/M)	MRB Qty/ MRB Reject Qty	Cost Per Unit/ Book Amt
receiver date	9/24/2009										
PO 10386	M6061T6B0.125X2.500	VC-MAG002	5		f	9/18/2009	12.0000	12.0000	0.0000	0	$7.66
	6061T6 BAR .125 X 2.50	Magna Stainless	No		f			Stores	0.0000	0	$91.92
	112764	CAD						$91.92			
	M6061T6B0.500X10.000		6		f	9/18/2009	24.0000	24.0000	0.0000	0	$18.33
	6061-T6 Bar .500 x 10.00		No		f			Stores	0.0000	0	$439.92
	112764							$439.92			
	M6061T6B2.000X03.500		7		f	9/18/2009	24.0000	24.0000	0.0000	0	$25.83
	6061-T6 Bar 2.00 x 3.50		No		f			Stores	0.0000	0	$619.92
	112764							$619.92			
	M304B0.500X2.500		8		f	9/10/2009	60.0000	48.4400	0.0000	0	$15.00
	304 BAR .500 x 2.50		No		f			Stores	0.0000	0	$726.60
	112764							$726.60			

Total Received Quantity:	108.4400
Total Quantity to Inspect (PO U/M):	0.0000
Total Reject Quantity:	0.0000
Total Receipt Value:	$1,924.44

Magna Stainless
5775 Kieran St, Saint-Laurent, Quebec H4S 0A3
Phone: (514) 339-1211 Watts: 1-800-363-6646 Fax: (514) 339-1105

PACKING LIST

REPRINT

I017098
Page: 1 of 1

SOLD TO:
DART AEROSPACE LTD
1270 ABERDEEN STREET

HAWKESBURY , ON
K6A 1K7
Contact: CHANTAL

SHIP TO:
DART AEROSPACE LTD
1270 ABERDEEN STREET

HAWKESBURY , ON
K6A 1K7
Ship Terms: PREPAID

MTR:Y

SPECIAL INSTRUCTIONS

Currency	Sales Person	Customer Phone	Customer Fax	Customer PO
CANADIAN DOLLARS	ERYCK BLAIS	(613) 632-5200	(613) 632-1053	PO10386

Sales Order	Terms	Ship Via	Date Ordered	Date Required	Date Shipped
W018319	NET 30 DAYS	NIR:R-557065-1	09/14/09	09/21/09	09/24/09

Ordered	Back Ordered	Unit	Description		Bundle #	Heat #	Shipped
			ALUMINUM - LB				
1		PC	6061-T6 1/8" X 2 1/2" X 144"	5 LB / 1 PC	L031466	20206240	1 1
2		PC	6061-T6 1/2" X 10" X 144"	146 LB / 2 PC	L031467	20245992	2 2
2		PC	6061-T6 2" X 3 1/2" X 144"	202 LB / 2 PC	L031468	200909862	2 2
Bundles: 1					Total	Weight:	353 LB

Received by: _____ Date: 24/09/09 Signature: _____

5775 Kieran St, Saint-Laurent, Quebec H4S 0A3
Phone: (514) 339-1211 Watts: 1-800-363-6646 Fax: (514) 339-1105

PACKING LIST

REPRINT

I017090

SOLD TO:
DART AEROSPACE LTD
1270 ABERDEEN STREET

HAWKESBURY , ON
K6A 1K7
Contact: CHANTASL

SHIP TO:
DART AEROSPACE LTD
1270 ABERDEEN STREET

HAWKESBURY , ON
K6A 1K7
Ship Terms: PREPAID

MAGNA
MTRX2

SPECIAL INSTRUCTIONS

ASA#

Currency	Sales Person	Customer Phone	Customer Fax	Customer PO
CANADIAN DOLLARS	ERYCK BLAIS	(613) 632-5200	(613) 632-1053	10386

Sales Order	Terms	Ship Via	Date Ordered	Date Required	Date Shipped
W018706	NET 30 DAYS	NIR:R-557065-1	09/21/09	09/24/09	09/24/09

Ordered	Back Ordered	Unit	Description	Bundle #	Heat #	Shipped
4		PC	STAINLESS FLATS SFL 304 HR 1/2" x 2-1/2" x R/L 12'11" 222 LB / 4 PC	L031497	245179	4 4
Bundles: 1				Total	Weight:	222 LB

24/9/09

Received by: _____ Date: _____ Signature: _____

Dart Aerospace Ltd.
1270 Aberdeen Street
Hawkesbury, ON K6A 1K7
Tel: 613 632 9577

OUTSTANDING PO REPRINT

Purchase Order ID PO10386
Purchase Order Date 9/10/09
PO Print Date 9/24/09

Order From : VC-MAG002

MAGNA STAINLESS
5775 RUE KIERAN
ST LAURENT, QC H4S 0A3
CA

Contact Name		**Buyer**	Chantal Lavoie
Vendor Phone	800 363 6646	**Requisition Nbr**	
Vendor Fax	514 339 1105	**Tax Resale Nbr**	10127-2607
Vendor Account Nbr		**Terms**	Net 30
		Currency	CAD
		FOB	

Line Nbr	Reference / Revision ID / Vendor Part Number	Description/ Mfg ID	Req Date/ Taxable	Req Qty	Unit Price	Extended Price

Ship To : DART AEROSPACE LTD 1270 ABERDEEN
HAWKESBURY, ON K6A 1K7
CANADA

Line Nbr	Reference / Revision ID / Vendor Part Number	Description/ Mfg ID	Req Date/ Taxable	Req. Qty/ Unit of Measure	Ship Method	Unit Price	Extended Price
5	M6061T6B0.125X2.500	6061T6 BAR .125 X 2.50	9/18/09 Yes	✓ 12.00 f	Yours ppd	$7.6600	$91.92
		Special Inst:	MAT: 6061-T6/T651/T6510/T6511/T62 ALUMINUM BAR SPEC: QC-A-225/8 OR AMS-QC-A-225/8 (OR AMS 4117/4128/4115/4116) OR QC-A-200/8 OR AMS-QQ-A-200/8 (OR AMS 4160) OR ASTM B211 OR ASTM B221		**Line Total:**		**$91.92**
6	M6061T6B0.500X10.000	6061-T6 Bar .500 x 10.00	9/18/09 Yes	✓ 24.00 f	Yours ppd	$18.3300	$439.92

l. 9/27/24

REFERENCE ONLY

MATERIAL CERTIFICATION REQ'D UPON DELIVERY

9/24/09

CZ

Dart Aerospace Ltd.
1270 Aberdeen Street
Hawkesbury, ON K6A 1K7
Tel: 613 632 9577

OUTSTANDING PO REPRINT

Purchase Order ID PO10386
Purchase Order Date 9/10/09
PO Print Date 9/24/09

Order From : VC-MAG002

MAGNA STAINLESS
5775 RUE KIERAN
ST LAURENT, QC H4S 0A3
CA

Contact Name
Vendor Phone 800 363 6646
Vendor Fax 514 339 1105
Vendor Account Nbr

Buyer Chantal Lavoie
Requisition Nbr
Tax Resale Nbr 10127-2607
Terms Net 30
Currency CAD
FOB

Line Nbr	Reference / Revision ID / Vendor Part Number	Description/ Mfg ID	Req Date/ Taxable	Req Qty		Unit Price	Extended Price
		Special Inst: SAME AS ABOVE				**Line Total:**	**$439.92**
7	M6061T6B2.000X03.500	6061-T6 Bar 2.00 x 3.50	9/18/09 Yes	24.00 f	Yours ppd	$25.8300	$619.92
		Special Inst: SAME AS ABOVE				**Line Total:**	**$619.92**
8	M304B0.500X2.500	304 BAR .500 x 2.50	9/10/09 Yes	47.90 f	Yours ppd	$15.0000	$718.50
		Special Inst: MAT: AISI 304/316 STAINLESS STEEL BAR (NOTE: AISI 303 NOT APPLICABLE)				**Line Total:**	**$718.50**

Outstanding PO Total: **$1,870.26**

MATERIAL CERTIFICATION REQ'D UPON DELIVERY

REFERENCE ONLY

No substitution or deviation without consent.
Certificate of Conformity or Material Certification required when applicable

Change Nbr: 4 **Change Date:** 9/24/09

P006739_20206240

sapa: Sapa Industrial Extrusions
53 POTTSVILLE STREET
-
CRESSONA, PA
17929-0187

Sapa Extrusions Inc., a Subsidiary of Sapa AB

Certified Inspection Report

Cert Number	Page
SAPA89183	Page 1 of 2
Cert Creation Date: 16-JUL-09	Cert Print Date: 16-JUL-09

Sales Order Number	Line No.	Customer P/O
1100072649	3	P90608CG021-3

Invoice To Customer

-

Ship To Customer

-
-

Quantity Shipped	Date Shipped	Item Description
2242 LB	16-JUL-09	Extruded Rectangular Bar 0.125 TK x 2.5 W 144 IN LN 6061 / T6511 FIN M-MILL W/F 0.367 F 14 CS 2.5 Marking CONTINUOUS; ASTMB221 REV 08 UNS#A96061 REV UNS#A96061 REV AMS-QQ-A-200/8 REV
B/L: 59905	Item No.: G03351057	
Delivery Id: 4029113	Item No. Rev: --	
Customer Part No.: 125X2.5		

Applicable Specifications, Revisions and Exceptions

Certificate in accordance with EN10204 3.1

COMPOSITION NOTE: The values for 'Others Each' and 'Others Total' have met the limits as shown on this certified inspection report. Remainder is Aluminum.

Legal Statement

We hereby certify that, unless otherwise indicated, the material covered by this report has been manufactured, inspected, and tested in accordance with, and has been found to meet, the applicable requirements described herein, including any specifications forming a part of the description and that samples representative of the material met the composition and had the mechanical properties shown on the face of this certification. Also, note that mercury is not a normal contaminant in aluminum alloys and neither it nor any of its compounds are used in the manufacture of our product. This certification is not to be reproduced in partial form without prior written approval of our Quality Assurance Dept.

Signature And Title

Dave A Lukasak
Tech/Quality Manager
16-JUL-09

Quantities per Lot / Packages

Package Number	Lot Number	Quantity	UOM	Weight Gross	Weight Net
G12-PKG1084499	20206240	258	PCS	1129	1121
G12-PKG1084500	20206240	258	PCS	1129	1121

S 09/09/05

Composition Limits

Alloy	Si Min	Si Max	Fe Min	Fe Max	Cu Min	Cu Max	Mn Min	Mn Max	Mg Min	Mg Max	Cr Min	Cr Max	Zn Min	Zn Max
6061	0.40	0.8	—	0.7	0.15	0.40	—	0.15	0.8	1.2	0.04	0.35	—	0.25

Inc 09-21-09

S90914DG001-1 MAGNA STAINLESS PO: P006739 Part #:
1.00PC

sapa: Sapa Industrial Extrusions
53 POTTSVILLE STREET
CRESSONA, PA
17929-0187

Certified Inspection Report

Sales Order Number	Line No.	Customer P/O	Cert Number	Page
1100072649	3	P90608CG021-3	SAPA89183	Page 2 of 2
			Cert Creation Date: 16-JUL-09	Cert Print Date: 16-JUL-09

Alloy	Ti		Bi		Pb		Others Each		Others Total	
	Min	Max	Min	Max	Min	Max	Min	Max	Min	Max
6061	--	0.15	--	--	--	--	--	0.05	--	0.15

Composition Results

Heat / Cast	Si	Fe	Cu	Mn	Mg	Cr	Zn	Ti	Bi	Pb	Others Each	Others Total
5021323	0.7	0.24	0.28	0.04	0.9	0.06	0.04	0.01	--	--	--	--

Mechanical Property - Test Limits

		Test Type	UTS - L		TYS - L		EL 4D-Long	
		UOM	KSI		KSI		PCT	
		# of Tests	--		--		--	
Test Temper	Lot Number	# of Tests	MIN Value	MAX Value	MIN Value	MAX Value	MIN Value	MAX Value
T6511	20205240	3	43.3	44.8	39.8	41.2	12.2	12.7

Cert Notes

Products manufactured with a T6511 temper also meet T6 temper requirements.

Yield strength has been determined by the 0.2% offset method

All Alloys Produced at Sapa Industrial Extrusions comply with 0.4% Maximum Lead per RoHS, with the exception of 6262 alloy

Made in USA

JUL 17 2009

BY Kathy Bell

KATHY BELL, CERTIFICATION PROCESSOR

Inc 09-21-09

S90914DG001-1 MAGNA STAINLESS PO: P006739 Part #:
1.00PC

P006739 - 200909862

SERVICE CENTER METALS
5850 Quality Way
Prince George, VA 23875

CERTIFIED INSPECTION REPORT AND TEST RESULTS FOR EXTRUDED PRODUCTS

OUR ORDER NUMBER	ITEM
909662	27

BILL TO

SHIP TO

MANIFEST NUMBER: 86672
CUSTOMER PO: P90716CG001 CT
CUSTOMER PART NUMBER: MRB0481

DIE NUMBER: MRB0481
ALLOY / TEMPER: 6061-T6511
DESCRIPTION: MORB 2.000x3.500

DATE OF SHIPMENT: 8/13/2009
SALESPERSON: David Schroeder

CERTIFICATION: ASTM-B221-08 Stencil
SPECIFICATION: AMS-QQA-200/8

We hereby certify that the material covered by this report has been inspected in accordance with the most recent certification revision, and has been found to meet the applicable requirements described herein, including any specifications forming a part of the description, and that samples representative of the material met the composition limits and had the mechanical properties shown. SCM extrusions are manufactured in the USA from ingot melted and cast in the United States or Canada.

Items produced and certified as 6061-T6511 also meet the requirements of 6061-T6

Mechanical Properties

Lot No.	Test No.	Test Date	Ultimate Tensile Strength (KSI)	Yield Strength (KSI)	Percent Elongation
200909862	1	08/11/09	54.3	48.0	19.5

S 09/09/25

BY Melissa Gagnier
MELISSA GAGNIER CERTIFICATION PROCESSOR

Chemical Composition for Alloy 6061

Alloy		Si	Fe	Cu	Mn	Mg	Cr	Zn	Ti	Other: Each	Other: Total	Al	Melted In
6061	Max	0.8	0.7	0.40	0.15	1.2	0.35	0.25	0.15	0.05	0.15	Remainder	
	Min	0.40	-	0.15	-	0.8	0.04	-	-				

United States of America

Rev. 9/26/07 - UMS

Print Date: 8/13/2009

Robert M. Ramage Ph.D, Director of Quality & Technical Services

Inc 09-21-09

$909140G001-3 MAGNA STAINLESS PO: P006739 Part #:
2.00PC 202.00LB

P006739_20245992

sapa: Sapa Industrial Extrusions
53 POTTSVILLE STREET
--
CRESSONA, PA
17929-0187

Sapa Extrusions Inc., a Subsidiary of Sapa AB

Certified Inspection Report

Cert Number	Page
SAPA102563	Page 1 of 3

Cert Creation Date	Cert Print Date
12-AUG-09	12-AUG-09

Sales Order Number	Line No.	Customer P/O
1100096128	2	P90810CG002-2

Invoice To Customer

--
--

Ship To Customer

--
--
--

Quantity Shipped	Date Shipped	Item Description
4930 LB	12-AUG-09	Extruded ECON-O-PLATE 0.500 TK x 10.000 W SECT 505025 144.000 IN LN 6061-T6511 FIN M-MILL W/F 5.880 F 04 CS 10 Marking CONTINUOUS: ASTMB221 REV 08 AMS-QQ-A-200/8 REV ASMESB221 REV 99 UNS#A96061 REV
B/L: 67087	Item No.: G03360698	
Delivery Id: 4037119	Item No. Rev	
CustomerPart No.: 5X10		

Applicable Specifications, Revisions and Exceptions

Certificate in accordance with EN10204 3.1

COMPOSITION NOTE: The values for 'Others Each' and 'Others Total' have met the limits as shown on this certified inspection report. Remainder is Aluminum.

Legal Statement

We hereby certify that, unless otherwise indicated, the material covered by this report has been manufactured, inspected, and tested in accordance with, and has been found to meet, the applicable requirements described herein, including any specifications forming a part of the description and that samples representative of the material met the composition and had the mechanical properties shown on the face of this certification. Also, note that mercury is not a normal contaminant in aluminum alloys and neither it nor any of its compounds are used in the manufacture of our product. This certification is not to be reproduced in partial form without prior written approval of our Quality Assurance Dept.

Signature And Title

Dave A Lukasak
Tech/Quality Manager

12-AUG-09

Quantities per Lot / Packages

Package Number	Lot Number	Quantity	UOM	Weight Gross	Weight Net
G12-PKG1087367	20231651	14	PCS	996	990
G12-PKG1095929	20245992	--	--	--	--
G12-PKG1095929	20245992	14	PCS	991	985
G12-PKG1095930	20245992	14	PCS	991	985
G12-PKG1095941	20245992	--	--	--	--
G12-PKG1095941	20245992	14	PCS	991	985
G12-PKG1095948	20245992	14	PCS	991	985
G12-PKG1095948	20245992	--	--	--	--

8 09/09/09

Inc 09-21-09

S90914DG001-2 MAGNA STAINLESS PO: P006739 Part #:
2.00PC 146.00LB

sapa: Sapa Industrial Extrusions
53 POTTSVILLE STREET
--
CRESSONA, PA
17929-0187

Certified Inspection Report

Cert Number	Page
SAPA102563	Page 2 of 3

Sales Order Number	Line No.	Customer P/O	Cert Creation Date	Cert Print Date
1100096128	2	P90810CG002-2	12-AUG-09	12-AUG-09

Composition Limits

Alloy	Si		Fe		Cu		Mn		Mg		Cr		Zn	
	Min	Max	Min	Max	Min	Max	Min	Max	Min	Max	Min	Max	Min	Max
6061	0.40	0.8	--	0.7	0.15	0.40	--	0.15	0.8	1.2	0.04	0.35	--	0.25

Alloy	Ti		Bi		Pb		Others Each		Others Total	
	Min	Max	Min	Max	Min	Max	Min	Max	Min	Max
6061	--	0.15	--	--	--	--	--	0.05	--	0.15

Composition Results

Heat / Cast	Si	Fe	Cu	Mn	Mg	Cr	Zn	Ti	Bi	Pb	Others Each	Others Total
5021479	0.7	0.30	0.29	0.04	0.9	0.04	0.06	0.02	--	--	--	--
Heat / Cast	Si	Fe	Cu	Mn	Mg	Cr	Zn	Ti	Bi	Pb	Others Each	Others Total
5021598	0.6	0.27	0.25	0.03	0.9	0.05	0.06	0.02	--	--	--	--

Mechanical Property - Test Limits

Test Type			UTS - L		TYS - L		EL 4D-Long	
UOM			KSI		KSI		PCT	
# of Test			--		--		--	
Test Temper	Lot Number	# of Tests	MIN Value	MAX Value	MIN Value	MAX Value	MIN Value	MAX Value
T6511	20231651	2	44.4	45.5	39.9	42.4	18.8	20.1
Test Type			UTS - L		TYS - L		EL 4D-Long	
UOM			KSI		KSI		PCT	
# of Test			--		--		--	
Test Temper	Lot Number	# of Tests	MIN Value	MAX Value	MIN Value	MAX Value	MIN Value	MAX Value
T6511	20245992	2	44.5	46.6	40.5	42.5	18.9	20.2

Cert Notes

Products manufactured with a T6511 temper also meet T6 temper requirements.

Yield strength has been determined by the 0.2% offset method

8 09/09/05

Ino 09-21-09

S90914DG001-2 MAGNA STAINLESS PO: P006739 Part #:
2.00PC 146.00LB

sapa:

Sapa Industrial Extrusions
53 POTTSVILLE STREET
-
CRESSONA, PA
17929-0187

Certified Inspection Report

Sales Order Number	Line No.	Customer P/O	Cert Number	Page
1100096128	2	P90810CG002-2	SAPA102563	Page 3 of 3
			Cert Creation Date	Cert Print Date
			12-AUG-09	12-AUG-09

All Alloys Produced at Sapa Industrial Extrusions comply with 0.4% Maximum Lead per RoHS, with the exception of 6262 alloy

Made in USA

AUG 13 2009

BY Melissa Gagnier
MELISSA GAGNIER CERTIFICATION PROCESSOR

Inc 09-21-09

S90914DG001-2 MAGNA STAINLESS PO: P006739 Part #:
2.00PC 146.00LB

Acciaierie Valbruna S.p.A.

36100 VICENZA (Italia) - Viale della scienza, 25 z.I.
Stab.: 39100 BOLZANO (Italia) - Via A. Volta, 4

CERTIFICATO DI COLLAUDO
ABNAHMEPRUEFZEUGNIS
INSPECTION CERTIFICATE
CERTIFICAT DE RECEPTION
EN 10204 (2005) , 3.1

72715

Cliente / Besteller/Purchaser/Client
VALBRUNA CANADA LTD
8724 HOLGATE CRESCENT
CDN-MILTON, ONT L5T 5Z1-CAN

Avviso di Spedizione: D-VI08014292
Lieferanzeige/Packing list/B.L.

Certificato nr: MEST632454/2008/
Prüfung/Test/Essai

Conferma ordine nr: EI08008070
Werks/Our Order/Ref nr.

Produttore: ACCIAIERIE VALBRUNA S.P.A.
Hersteller/Item/Usine produtrice

Ordine nr: 805001970 STOCK
Bestell/Your order/Commando

Marchio di Fabbrica:
Zeichen des Liefermerkes
Trade mark
Sigle de l'usine produtrice

Oggetto Prove: Descaled Annealed Hotrolled
Prüfgegenstand/Item Inspected/Finissage

Tipo di Elaborazione: E+AOD
Erschmelzungsart/Melting process/Mode d'elaboration

Punzone del Collaudatore:
Stempel des Werkssachverständigen
Inspector's stamp/Poinçon de l'assayeur

MR

Specifiche:
Anforderungen / Requirements / Exigences

VAL CANADA 2 304/304L A
ASME SA182 2007 S30400/03 0
ASME SA479 2007 S30400/03 3
ASTM A262 2002A PRACTICE E
ASTM A320 2007A B8
NACE MR0175* 2003 S30400/03 A 5
(0) SEC.II PT.A 2007 EDITION
(1) SEC.II PT.A 2007 EDITION
(3) SEC.II PT.A 2007 EDITION
(5) * ISO 15156-3

AMS 5639 H S30400
ASME SA193 2007 B8 1
ASTM A182 2007A S30400/03 4
ASTM A276 2006 S30400/03
ASTM A479 2006A S30400/03
QQ-S-763 F 304/304L

AMS 5647 H S30403
ASME SA320 2007 B8 (2)
ASTM A193 2007 B8
ASTM A314 97 S30400/03
MIL-S-862 B/1 304/304L

0Chemical analysis only.
2SEC.II PT.A 2007 EDITION
4Chemical analysis only.

09.09.29

Qualità: T-304L
Werkstoff/Grade/Nuance

Marca: AISL
Markenbezeichnung/Brand/Nuance

Punzonatura: T-304L
Kennzeichnung/Marking/Marquage

Pos. nr. Pos. nr. Item nr. Nr. de poste	Oggetto Gegenstand Product description Descrip. du produit	Dimensioni - In Abmessungen Dimension Dimension	Tolleranza Toleranz. Allowance Tolerance	Lunghezza - Ft Lange Length Longueur	Colata Schmelze Heat Coulée	Pezzi Stückzahl Pieces Pieces	Peso - LB Gewicht Weight Poids	Lotto nr. Losnr. Lot nr. Lot nr.
0040	Flat	2,5000 x 0,5000	484-06B	12 / 13	245179		3.104	707600210

Sono state soddisfatte tutte le condizioni richieste
Die gestellten Anforderungen sind lt. Anlage erfüllt
The material has been furnished in accordance with the requirements
Le materiel à été trouvé conforme aux exigences

Controllo antimescolanza: OK
Verwechslungsprüfung: spectralanalytisch durchgeführt
Antimixing testing performed: OK
Contrôle antimélange fait: r.a.s.

Controllo visivo e dimensionale: soddisfa le esigenze:
Sichtprüfung und Ausmessung: ohne Beanstandung
Visual inspection and dimensional checks:satisfactory
Contrôle visuel et dimensions: satisfaisant

TEST	Provetta/Probestab Specimen/Eprouvette Larg./Diam. Spess. Breite/Durchm. Dicke Width/Diam. Thickness Larg./Diam. epais mm	°F	Posiz. Saggio Probenlage Lame im Empfaumend 1)	Snervamento Streckgrenze Yield Stress Limite elastique Rp 0,2% k.s.i.	Snervamento Streckgrenze Yield Stress Limite elastique	Resistenza Zugfestigkeit Tensile strength Resistance à traction Rm k.s.i.	Allungamento Bruchdehnung Elongation Allongement E 4d %		Strizione Einschnürung Reduction of area Striction RA %		Resilienza Kerbschlagarbeit Impact Value Resilience			Durezza Härte Hardness Dureté HB		
Valori richiesti 1 Anforderungen/Required values Valeurs demandées		min max		30	-	75 115	-	40	-	50	-			140 223		
A	12,5	68	L	47		91		58		67				179		

1)L=longitudinale/längs, Q=trasversale/quer, T=Tangenziale/tangential

Grain size for ASTM E112 : 5

Analisi chimica

Chemische Zusammensetzung/Chemical Analysis/Analyse chimique

Colata Heat Schmelze/Coulée	min - max 0,030	- 1.00	- 2,00	18,00 20,00	- 1,00	- 1,00	8,00 10,50	- -	- 0,040	- 0,030	- 0,100	- -	- -	- -	- -
	C %	Si %	Mn %	Cr %	Mo %	Cu %	Ni %	Co %	P %	S %	N %				
245179	0,020	0,42	1,67	18,10	0,54	0,48	8,22	0,100	0,031	0,029	0,081				

Produced without class I-II Ozone depleting substances.
Solution heat treated free from continuous carbide network.
Annealing temperature: 1940°F for 0.5 h/water.
Micro and macro etch test: OK
Intergranular corrosion test per ASTM A262 pract. E: ok.
Material is DFARS Compliant

Melted and manufactured in Italy No welding or weld repair Material free from Mercury or radio-activity contamination
The Quality Management System is Certified acc. Pressure Equipment Directive [97/23/EC] Annex 1.s.,4.3 by TUEV and LLOYD'S

Vicenza,21/05/08 VCOCOS (Mod. VCER)	*Il collaudatore di stabilimento / der Werkssachverständige / Works inspector / L'agent d'usine* M.Rizzotto	Pagina - 1 di 1